LBLT INDEXING PLUNGERS

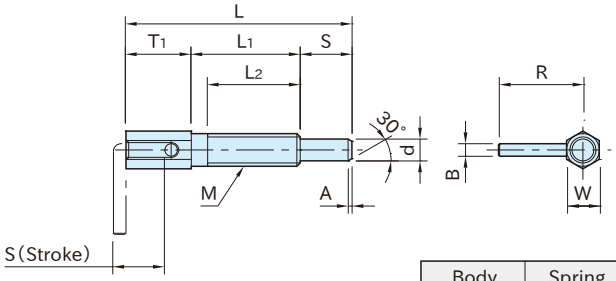

Body	Spring
Steel (SUM22L) Zinc plated	SUS301

Part Number	d (+0.01 / −0.03)	S	M	L_2	A	L	L_1	W	T_1	R	B	Force (N) Initial - Final	Max. Screw Torque (N·m)	Weight (g)
LBLT 4	4	9.5	M 6×1	17	0.7	41.5	20	6	12	15.5	2.3	3 ~10	1.6	6
LBLT 5	5	12	M 8×1.25	24	0.9	54	27	8	15	19.2	3	3.5~13.5	4.5	14
LBLT 6	6	14	M10×1.5	30	1.1	65	33.5	10	17.5	22.9	3.5	4 ~16	10	29
LBLT 8	8	19	M12×1.75	28	1.3	73	31.8	12	22.2	31.2	4.7	4 ~22	13	47
LBLT10	10	25	M16×2	44.5	1.6	102.5	50.5	16	27	32.7		4 ~23	42	114
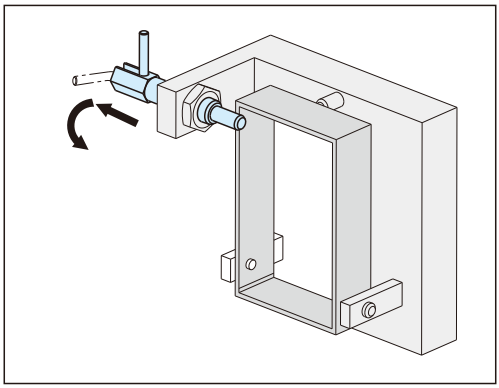
How To Use