CP710 SPRING-LOADED WORK LOCATORS

CP710-A
(Standard)

CP710-B
(Accurate)

Body	Locating Pin
Steel (S45C) Quenched and tempered Black oxide finish	Steel (SK95) Quenched and tempered

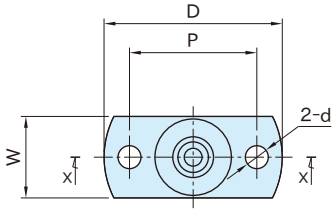

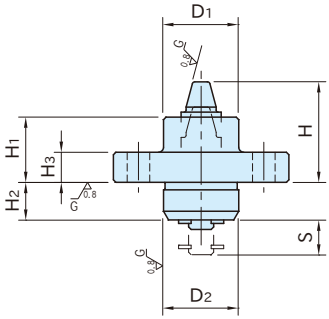

CP710-A
(Standard)

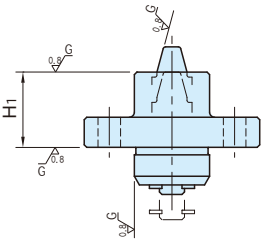

CP710-B
(Accurate)

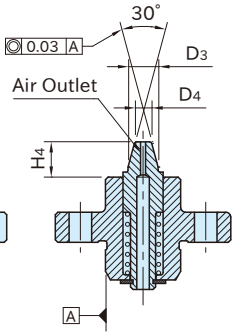

Section X-X

■ Standard

Part Number	Proper Through-Hole Dia. *)	D_4	D_3	H_4	S	H	H_1	D_2 (g6)	H_2	D
CP710-04015A	φ 3.8～φ 5.2	3.1	6	7.6	7.4	20.6	13	15	7.5	35
CP710-05015A	φ 4.8～φ 6.2	4.1	7							
CP710-06020A	φ 5.8～φ 8.2	5.1	9	9.6	9.9	27.6	18	20	10	40
CP710-08020A	φ 7.8～φ10.2	7.1	11							
CP710-10025A	φ 9.3～φ12.7	8.6	13.5	11.6	12.4	34.6	23	25	12.5	45
CP710-12025A	φ12.3～φ15.7	11.6	16.5							

Part Number	D_1	W	H_3	d	P	Support Capacity (N)	I.D. SpringConstant (N/mm)	Weight (g)
CP710-04015A	15	16	6	4.5	25	5.8～20	2.54	45
CP710-05015A								
CP710-06020A	20	22	8		30	4.8～21.3	2.18	95
CP710-08020A								
CP710-10025A	25	26	10		35	8.6～21.1	1.3	160
CP710-12025A								170

■ Accurate

Part Number	Proper Through-Hole Dia. *)	D_4	D_3	H_4	S	H	H_1 (±0.01)	D_2 (g6)	H_2	D
CP710-04015B	φ 3.8～φ 5.2	3.1	6	5.6	7.4	20.6	15	15	7.5	35
CP710-05015B	φ 4.8～φ 6.2	4.1	7							
CP710-06020B	φ 5.8～φ 8.2	5.1	9	7.6	9.9	27.6	20	20	10	40
CP710-08020B	φ 7.8～φ10.2	7.1	11							
CP710-10025B	φ 9.3～φ12.7	8.6	13.5	9.6	12.4	34.6	25	25	12.5	45
CP710-12025B	φ12 ～φ16	11.6	16.5							

Part Number	D_1	W	H_3	d	P	Support Capacity (N)	I.D. SpringConstant (N/mm)	Weight (g)
CP710-04015B	15	16	6	4.5	25	5.8～20	2.54	50
CP710-05015B								
CP710-06020B	20	22	8		30	4.8～21.3	2.18	100
CP710-08020B								
CP710-10025B	25	26	10		35	8.6～21.1	1.3	170
CP710-12025B								

*) The through hole can be chamfered up to 1x1mm.

Continuing on Next Page

How To Use

■Mounting Hole Dimensions

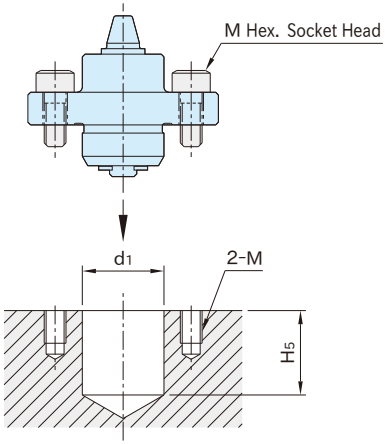

Series	d_1 (H7)	H_5	M
CP710-04015	15 (H7-effective depth : 8)	16	M4×0.7
CP710-05015			
CP710-06020	20 (H7-effective depth : 10)	21	
CP710-08020			
CP710-10025	25 (H7-effective depth : 13)	26	
CP710-12025			

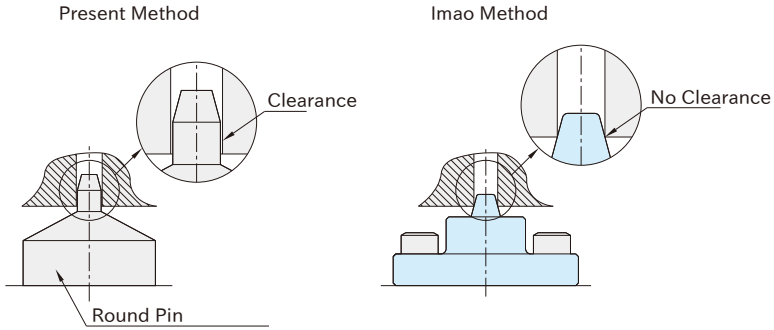

Use of tapered pin allows secure locating with no clearance between the locating hole and the tapered pin.

■Accurate Type Use

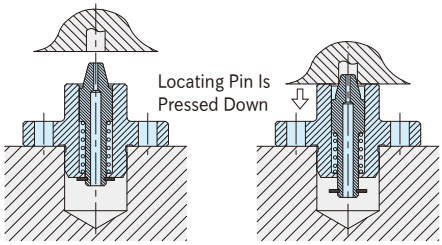

Before Setting Workpiece　　After Setting Workpiece

When the workpiece is set, the tapered pin is pressed down to locate it.
The Accurate Type allows positioning both vertically and horizontally.

■Standard Type Use

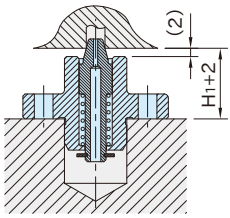

Use with 2 mm higher supports
to provide proper clearance to the workpiece.

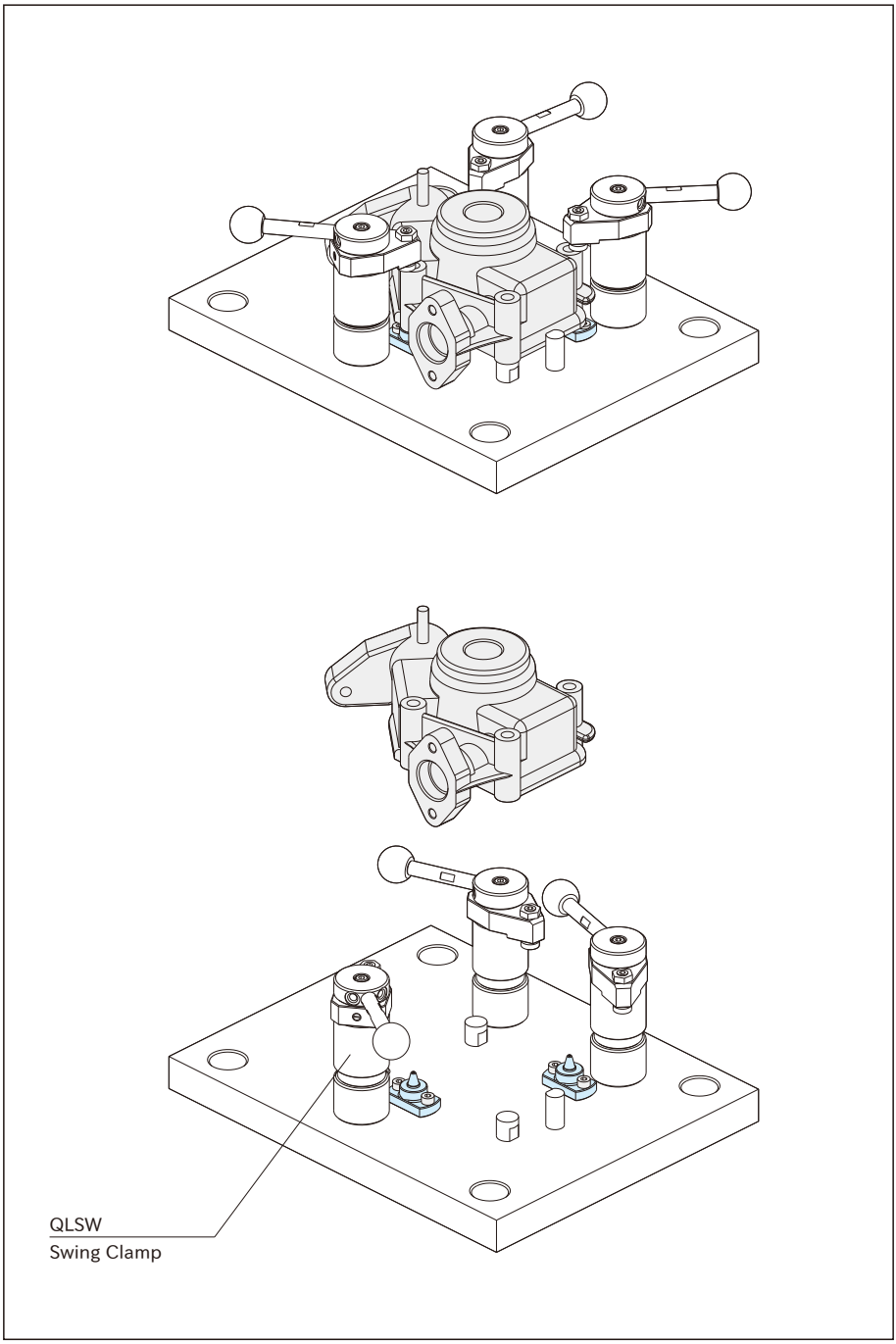

Note：In clamping, hold down the workpiece by hand to avoid lift that can be generated by spring force.