FORM HOLDING CLAMPS [CP125] INSTRUCTIONS

Note: Jaws must be ordered separately.

For Safe operation of the CP125, please read this instructions carefully before using.
Please keep this instruction manual handy for future reference.

***Jaws (for OD / ID holding) and screw (for ID holding) are sold separately.**

Part Number	Allowable Screw Torque (N·m)	Proper Jaws						Proper Tapered Screws
		For External Form Holding			For Internal Form Holding			
		Part Number	Clamping Force(kN)	Clamping Stroke	Part Number	Clamping Force(kN)	Clamping Stroke	
CP125-06501	15	CP126-06501	4.5	φ0.3	CP127-06501	4.5	φ0.3	CP127-06501B
CP125-09001	25	CP126-09001	7		CP127-09001	7		CP127-09001B
Cp125-12001	40	CP126-12001	10		CP127-12001	10		CP127-12001B
CP125-16001		CP126-16001	12		CP127-16001			CP127-16001B

⚠-For the use of jaw purchased separately, read its instruction together with this instruction.

■Precautions

Do not actuate clamping the jaw (CP126 or CP127) without a workpiece to avoid damage and deformation.
Tightening with torque greater than the allowable screw torque will lower the durability of the jaw.
Rotation angle of the cam cylinder is limited by internal mechanism.
Do not apply excessive load at the end position of rotation when tightening the cam cylinder.

■How To Use

■Mounting Hole Dimension

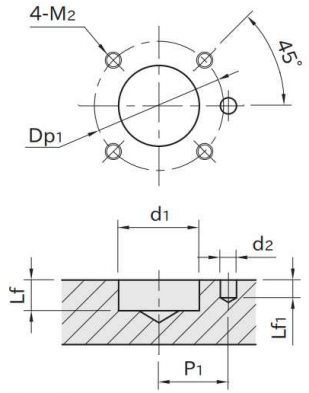

Part Number	d_1 (H7)	Lf	d_2 (G7)	Lf_1	P_1 (±0.02)	M_2	Dp_1
CP125-06501	28	13	6	6	22	M 6X1	42
CP125-09001	42	15	8	8	30	M 8X1.25	60
CP125-12001	55	19	10	11	43	M10X1.5	80
CP125-16001	63	25	12	13	60	M12X1.75	110

■Installation Instruction

Insert an included diamond pin into the body for locating and secure the body to the fixture plate with 4 socket-head cap screws.
Note: Use either of the holes for diamond locating pin for your application.

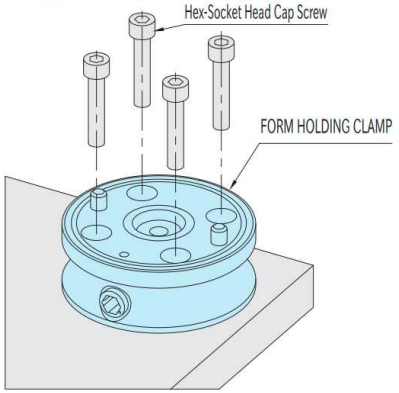

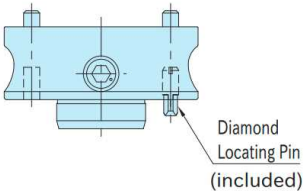

Dimension of Diamond Locating Pin

Part Number	Diameter
CP125-06501	ϕ 6h6
CP125-09001	ϕ 8h6
CP125-12001	ϕ 10h6
CP125-16001	ϕ 12h6

IMAO CORPORATION
【CONTACT US】
Export Sales Team
https://www.imao.com/en/contact-us/

2020.09