JAWS FOR OD HOLDING CLAMPS

INSTRUCTIONS

CP121-06501
CP121-09001

*The image below shows the body of CP120 clamps.

Precautions

1. Do not actuate clamping*1) without a workpiece inserted, to avoid damage and deformation.
2. Do not machine the jaw beyond the machinable area.
3. Check if the O-ring is fitted properly before installing the jaw.
4. Insert the jaw completely from right above. The O-ring can make it hard to insert the jaw.

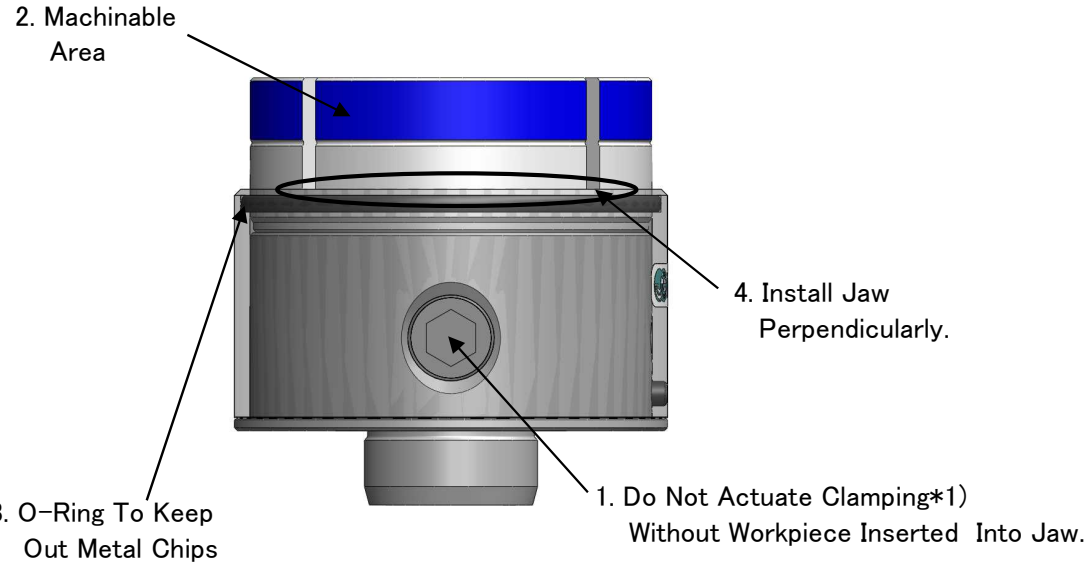

Jaws	O-Rings	OD Holding Clamps	Air-Assist OD Holding Clamps
CP121-06501	CO 0544(S65) NOK	CP120-06501	AMCH080-5W
CP121-09001	CO 0551(S90) NOK	CP120-09001	AMCH100-5W

Definition of "clamp(ing)" and "unclamp(ing)" used in the instructions

・For CP120 Clamps,
*1) "clamping" = "tightening the locking screw".
*2) "unclamping" = "loosening the locking screw".

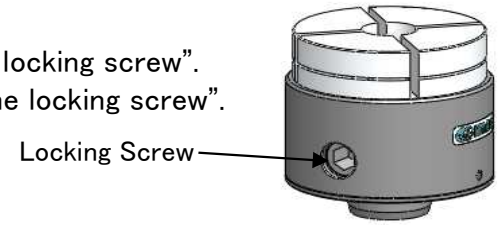

・For AMCH Clamps,
*1) "clamping" = "applying air pressure to clamp port".
*2) "unclamping" = "applying air pressure to release port".

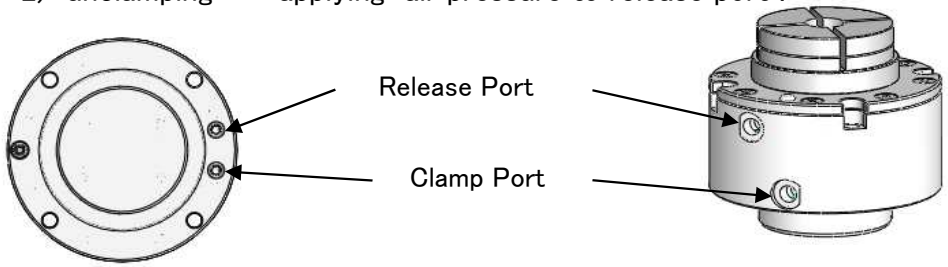

Jaw Removal

1. Set the jaw in the unclamping *2) mode.
2. Remove the jaw mounting screw.
3. Insert a screw of thread size specified below into the jaw's tapped hole and thrust it against the body.

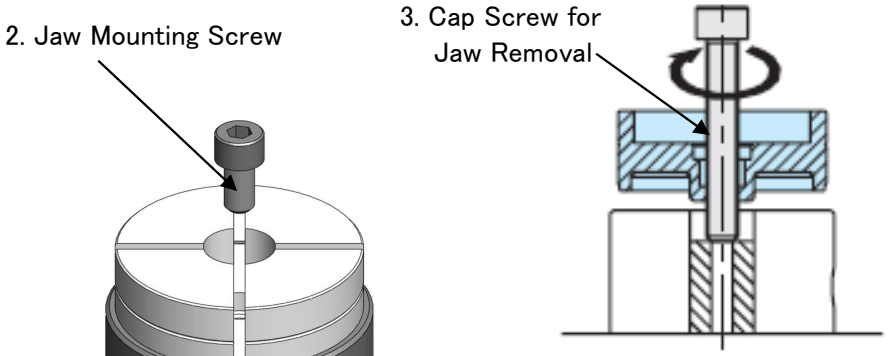

Part Nunber	Cap Screw for Jaw Removal
CP121-06501	M10
CP121-09001	M12

Jaw Installation

Note CP120 : At jaw installation, ensure the locking screw is fully loosened by turning counterclockwise until it stops.

AMCH : Jaw setting must be done with the unclamping port pressurized.

1. Fit the keyway on the jaw bottom onto the parallel key on the body top and then press down the jaw from right above.

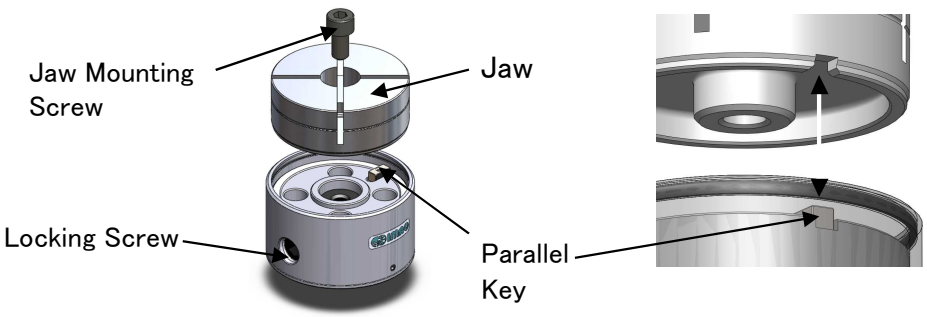

2. Check to see if the jaw is properly positioned, and then lock it using the jaw mounting screw.

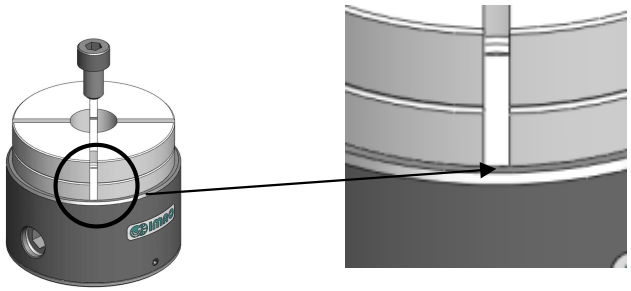

Jaw	Jaw Mounting Screw
CP121-06501	M8x15L
CP121-09001	M10x20L

Note : Ensure the slit bottom is flush with the top of the body cover at all four places, as shown above.
Installation must be run in the unclamping*2) mode.

Jaw Machining

1. Set the locking ring into the jaw.
(Using a screw facilitates setting)

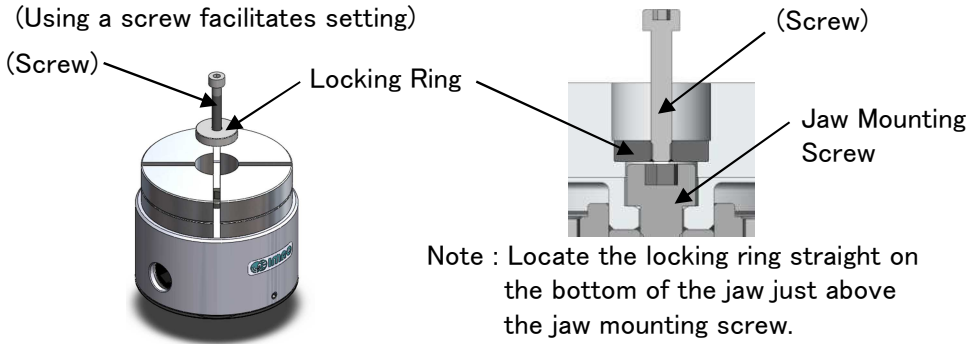

Note : Locate the locking ring straight on the bottom of the jaw just above the jaw mounting screw.

2. CP120 : Tighten the locking screw to clamp the locking ring.
(Tighten with half of the allowable screw torque or more.)

AMCH : Apply air to the clamping port to clamp the locking ring.
After clamping, remove the bolt from the locking ring.

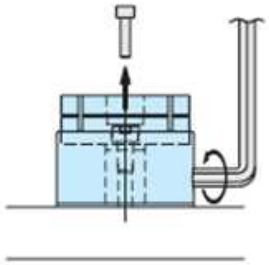

3. Machine the jaw to the contours of a workpiece.

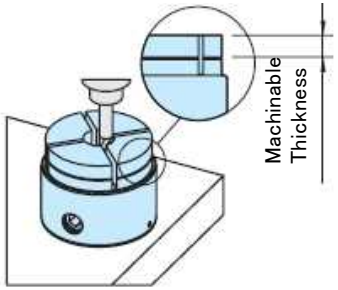

Workpiece Loading

1. After machining, unclamp*2) the workpiece and remove the locking ring.
2. Insert the workpiece and clamp*1) it.

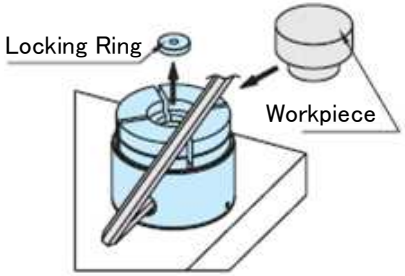

IMAO CORPORATION
【CONTACT US】
Export Sales Team
https://www.imao.com/en/contact-us/

2024.07